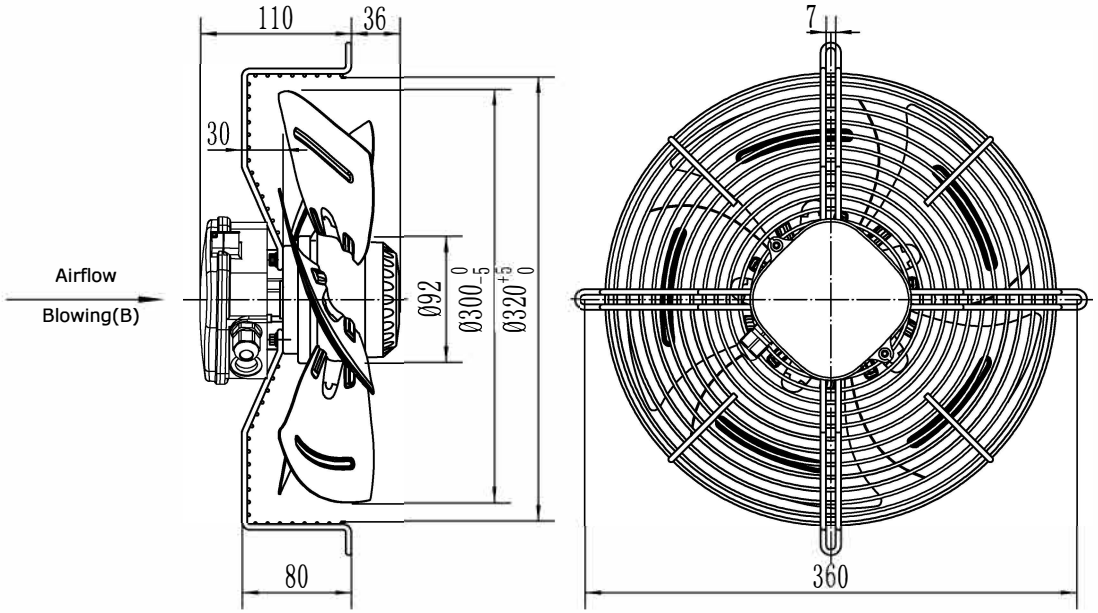


| | |
|---|---|
| UNIT | Axial fan motor |
| MOTOR | Single phase motor with capacitor |
| MOTOR TYPE | RW4-300 230V PUHALTAVA |
| VOLTAGE (V) | 230 |
| FREQUENCY (Hz) | 50 |
| INPUT POWER (W) | 85 |
| CURRENT (A) | 0.42 |
| SPEED (r/min) | 1380 |
| AIR FLOW 20Pa (m³/h) | 1690 |
| NOISE (dBA) | 60 |
| CAPACITOR (μF/450V) | 3 |
| ROTATION | CCW ,looking into the end-shield |
| INSULATION CLASS | B |
| MOTOR PROTECTION | Thermocontact 135±5℃ |
| TEMPERATURE RISE | 75K max |
| PROTECTION CLASS | IP54 |
| OPERATING TYPE | S1 |
| AMBIENT TEMPERATURE | -30°C +60°C |
| BEARINGS | Ball bearings |
| MOUNTING TYPE | Horizontal or Vertical |
| ELECTRICAL CONNECTION | Lead wire Silikon 4G 0.50mm² ,Length 100mm in terminal box connected |
| APPROVALS | CE |
| NET WEIGHT/GROSS WEIGHT | 3.0/4.0kg |
| PACKING | 34*34*18cm |

LABEL:

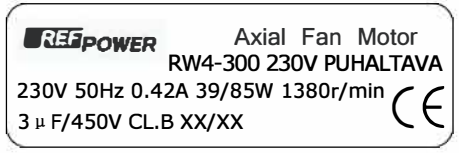


WIRING DIAGRAM:

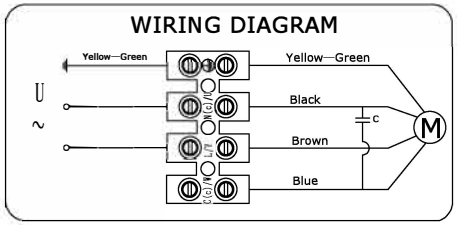


FLOW RATE CURVE:

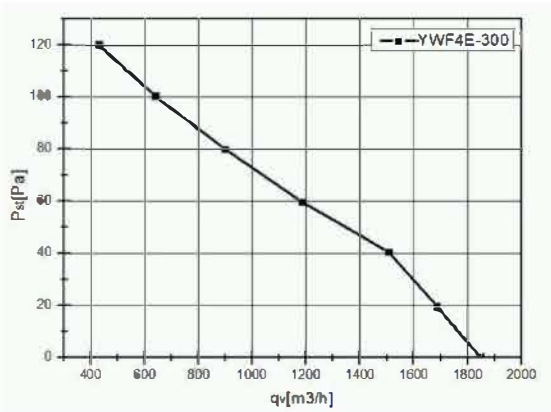


| | | | | | | | SIGN | DATE |
|---|---|---|---|---|---|---|---|---|
| | | | | | | DRN. BY | | |
| | | | | | | CHD. BY | | |
| | | | | | | ENG. BY | | |
| REV. | DESCRIPTION | APPROVED | DATE | | | APP. BY | | |

TITLE
RW4-300 230V PUHALTAVA

PROJECTION

A4
SCALE
SHEET: of