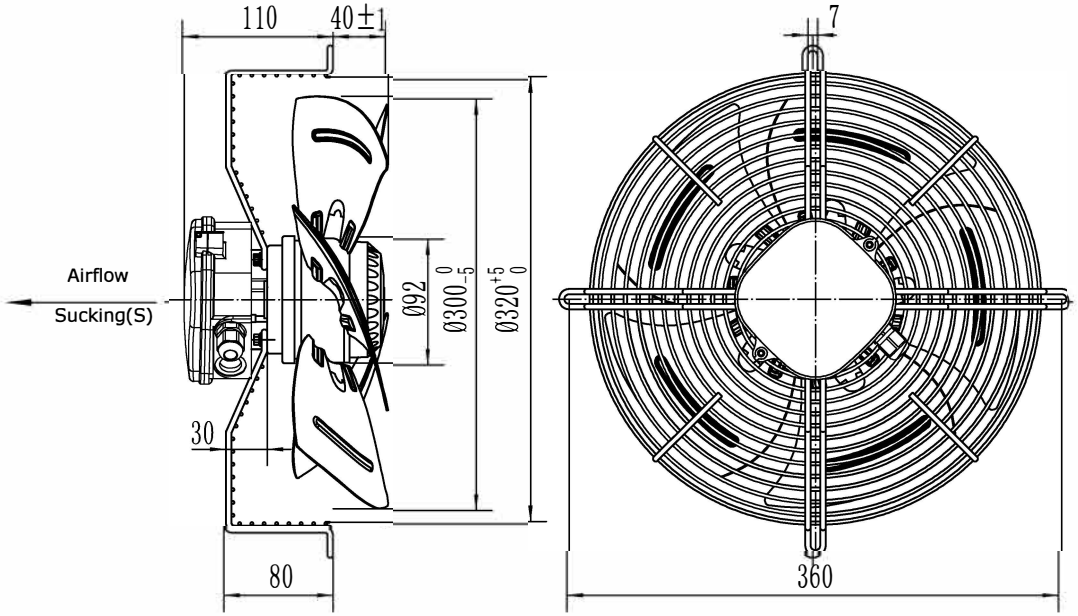

UNIT	Axial fan motor
MOTOR	Single phase motor with capacitor
MOTOR TYPE	RW4-300 230V IMEVÄ
VOLTAGE (V)	230
FREQUENCY (Hz)	50
INPUT POWER (W)	85
CURRENT (A)	0.42
SPEED (r/min)	1380
AIR FLOW 20Pa (m^3/h)	1690
NOISE (dBA)	60
CAPACITOR (μF/450V)	3
ROTATION	CW ,looking into the end-shield
INSULATION CLASS	B
MOTOR PROTECTION	Thermocontact 135±5℃
TEMPERATURE RISE	75K max
PROTECTION CLASS	IP54
OPERATING TYPE	S1
AMBIENT TEMPERATURE	-30°C +60°C
BEARINGS	Ball bearings
MOUNTING TYPE	Horizontal or Vertical
ELECTRICAL CONNECTION	Lead wire Silikon 4G 0.50mm² ,Length 100mm in terminal box connected
APPROVALS	CE
NET WEIGHT/GROSS WEIGHT	3.0/4.0kg
PACKING	34*34*18cm

LABEL:

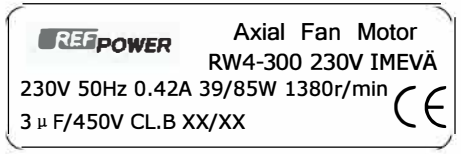

WIRING DIAGRAM:

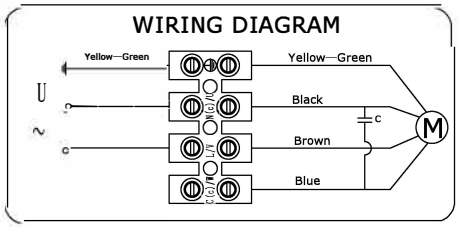

FLOW RATE CURVE:

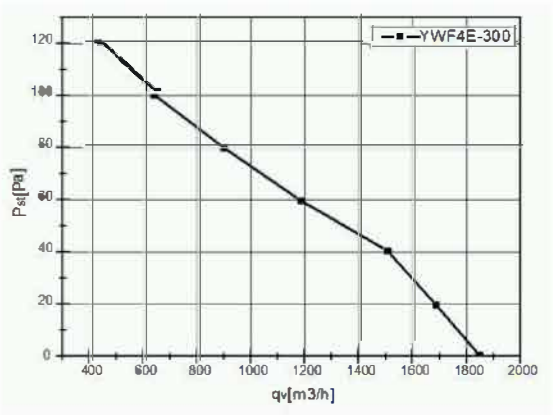

							SIGN	DATE
						DRN. BY		
						CHD. BY		
						ENG. BY		
REV.	DESCRIPTION	APPROVED	DATE			APP. BY		

TITLE
RW4-300 230V IMEVÄ

PROJECTION

A4
SCALE
SHEET: of