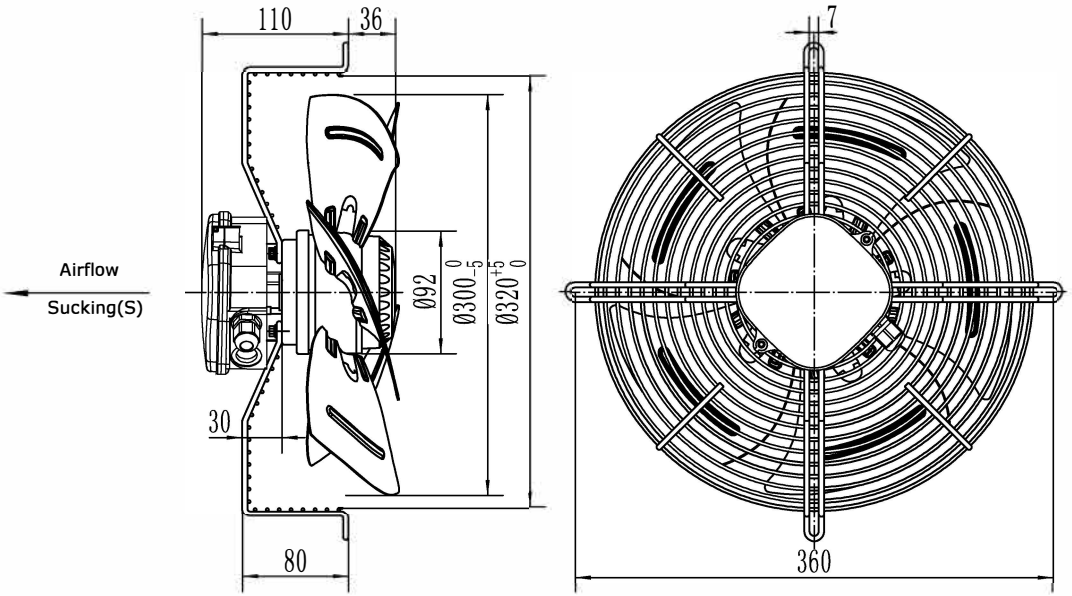

UNIT	Axial fan motor
MOTOR	Three phase motor
MOTOR TYPE	RW4-300 400V IMEVÄ
VOLTAGE (V)	400
FREQUENCY (Hz)	50
INPUT POWER (W)	75
CURRENT (A)	0.24
SPEED (r/min)	1380
AIR FLOW 20Pa (m³/h)	1670
NOISE (dBA)	60
CAPACITOR (μF/450V)	-
ROTATION	CW ,looking into the end-shield
INSULATION CLASS	B
MOTOR PROTECTION	Thermocontact 135±5℃
TEMPERATURE RISE	75K max
TYPE OF PROTECTION	IP54
OPERATING TYPE	S1
AMBIENT TEMPERATURE	-30°C +60°C
BEARINGS	Ball bearings
MOUNTING TYPE	Horizontal or Vertical
ELECTRICAL CONNECTION	Lead wire Silikon 6G 0.50mm² ,Length 100mm in terminal box connected (60.5mm²100mm)
APPROVALS	CCC、CE
NET WEIGHT/GROSS WEIGHT	3.0/4.0kg
PACKING	34*34*18cm

LABEL :

REF POWER
Axial Fan Motor
RW4-300 400V IMEVÄ
400V 50Hz 0.24A 36/75W 1380r/min
CL.B XX/XX
CE

FLOW RATE CURVE :

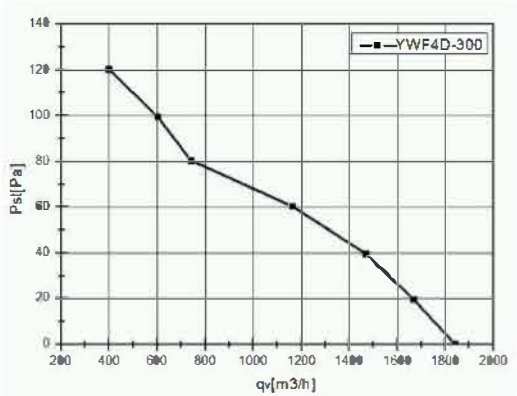

WIRING DIAGRAM :

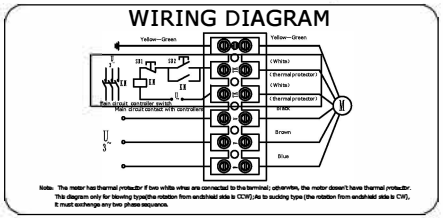

							SIGN	DATE
						DRN. BY		
						CHD. BY		
						ENG. BY		
REV	DESCRIPTION	APPROVED	DATE			APP. BY		

TITLE
RW4-300 400V IMEVÄ

PROJECTION

A4
SCALE
SHEET: of