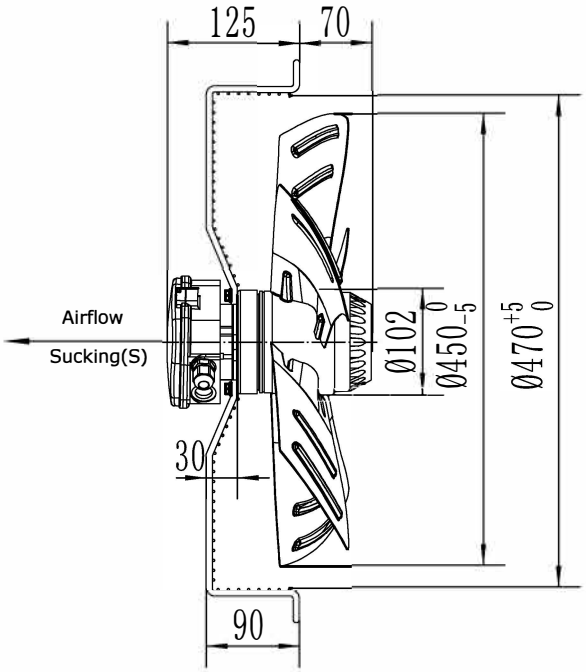

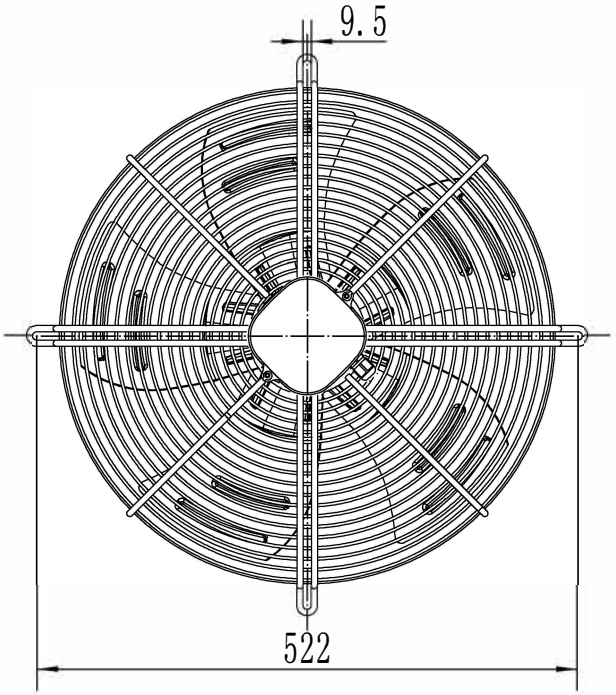

UNIT	Axial fan motor
MOTOR	Single phase motor with capacitor
MOTOR TYPE	RW4-450 230V IMEVÄ
VOLTAGE (V)	230
FREQUENCY (Hz)	50
INPUT POWER (W)	250
CURRENT (A)	1.15
SPEED (r/min)	1350
AIR FLOW 20Pa (m³/h)	4751
NOISE (dBA)	69
CAPACITOR (μF/450V)	8
ROTATION	CW ,looking into the end-shield
INSULATION CLASS	B
MOTOR PROTECTION	Thermocontact 135±5℃
TEMPERATURE RISE	75K max
PROTECTION CLASS	IP54
OPERATING TYPE	S1
AMBIENT TEMPERATURE	-30°C +60°C
BEARINGS	Ball bearings
MOUNTING TYPE	Horizontal or Vertical
ELECTRICAL CONNECTION	Lead wire Silikon 4G 0.50mm² ,Length 100mm in terminal box connected
APPROVALS	CE
NET WEIGHT/GROSS WEIGHT	8.0/9.0kg
PACKING	48.5*48.5*22cm

LABEL :

REGPOWER Axial Fan Motor
RW4-450 230V IMEVÄ
230V 50Hz 1.15A 155/250W 1350r/min
8 μF/450V CL.B XX/XX CE

WIRING DIAGRAM:

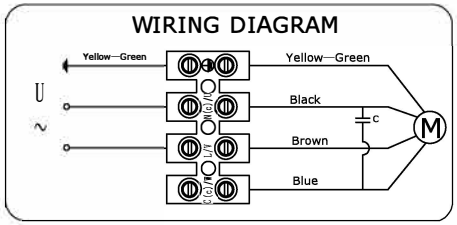

FLOW RATE CURVE:

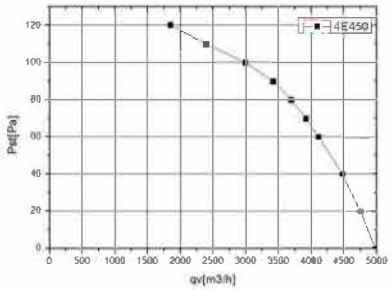

ErP2015 LABEL:

ErP2015（N40）
N= 40.42 η statA= 30.49%
RW4-450 230V IMEVÄ

REV.	DESCRIPTION	APPROVED	DATE				SIGN	DATE
						DRN. BY		
						CHD. BY		
						ENG. BY		
						APP. BY		

TITLE
RW4-450 230V IMEVÄ

PROJECTION

A4
SCALE
SHEET: of