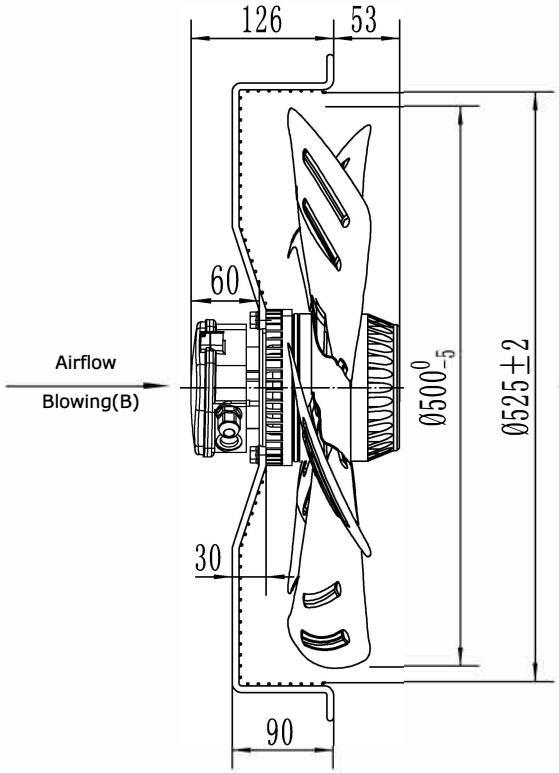

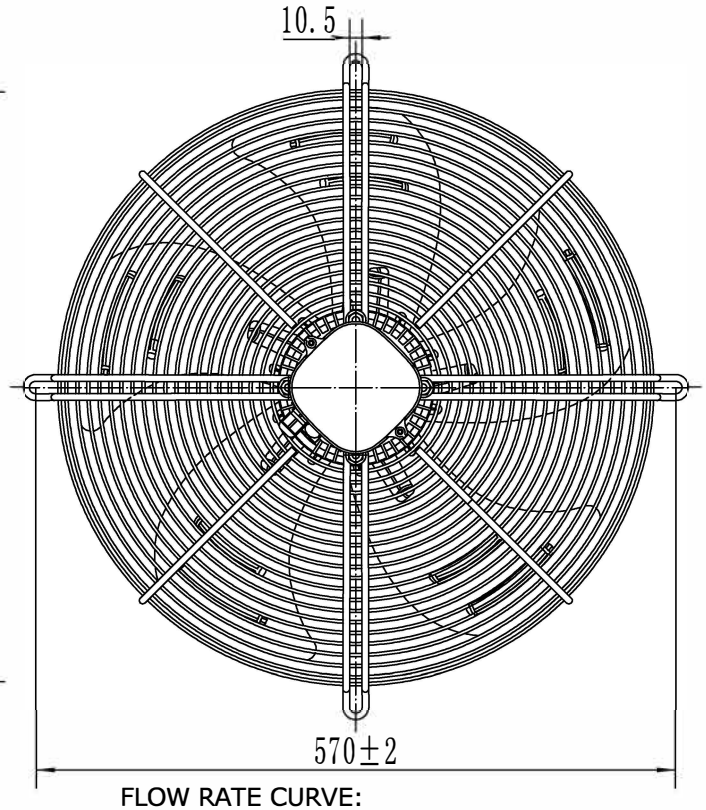

UNIT	Axial fan motor
MOTOR	Three phases motor
MOTOR TYPE	RW4-500 400V PUHALTAVA
VOLTAGE (V)	400
FREQUENCY (Hz)	50
INPUT POWER (W)	390
CURRENT (A)	0.80
SPEED (r/min)	1370
AIR FLOW 20Pa (m³/h)	6770
NOISE (dBA)	71
CAPACITOR (μF/450V)	-
ROTATION	CCW ,looking into the end-shield
INSULATION CLASS	B
MOTOR PROTECTION	Thermocontact 135±5℃
TEMPERATURE RISE	75K max
PROTECTION CLASS	IP54
OPERATING TYPE	S1
AMBIENT TEMPERATURE	-30°C +60°C
BEARINGS	Ball bearings
MOUNTING TYPE	Horizontal or Vertical
ELECTRICAL CONNECTION	Lead wire Silikon 4G 0.75mm²+2G 0.30mm², Length 100mm in terminal box connected
APPROVALS	CE
NET WEIGHT/GROSS WEIGHT	9.0/10.0kg
PACKING	53.5*53.5*22cm

LABEL :

REFPOWER Axial Fan Motor
RW4-500 400V PUHALTAVA
400V 50Hz 0.80A 240/390W 1370r/min
CL.B XX/XX
CE

WIRING DIAGRAM:

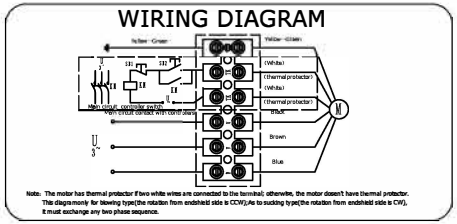

FLOW RATE CURVE:

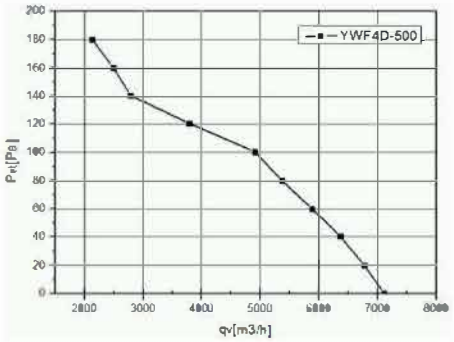

ErP2015 LABEL:

ErP2015（N40）
N=41.15 η statA= 32.6%
RW4-500 400V PUHALTAVA

REV.	DESCRIPTION	APPROVED	DATE				SIGN	DATE
						DRN. BY		
						CHD. BY		
						ENG. BY		
						APP. BY		

TITLE
RW4-500 400V PUHALTAVA

PROJECTION

A4
SCALE
SHEET: of