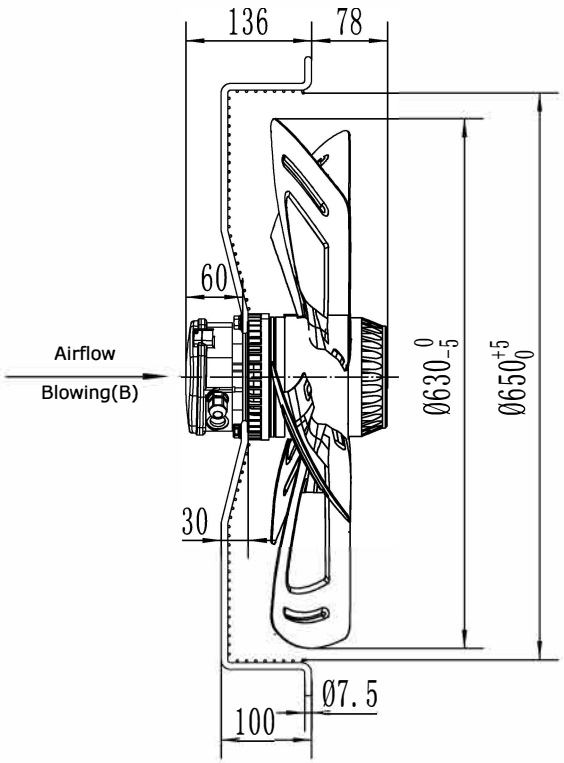

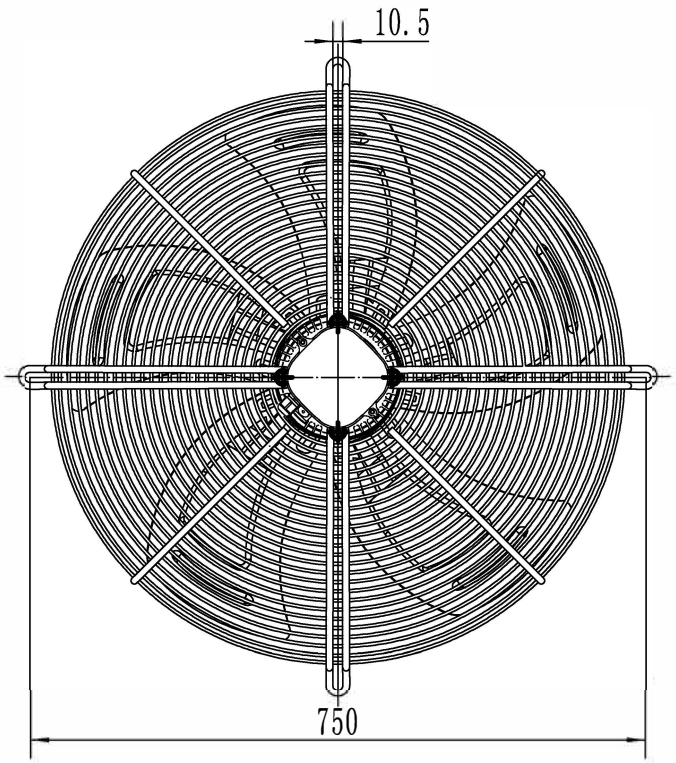

UNIT	Axial fan motor
MOTOR	Single phases motor with capacitor
MOTOR TYPE	RW4-630 230V PUHALTAVA
VOLTAGE (V)	230
FREQUENCY (Hz)	50
INPUT POWER (W)	750
CURRENT (A)	3.50
SPEED (r/min)	1360
AIR FLOW 20Pa (m³/h)	11080
NOISE (dBA)	75
CAPACITOR (μF/450V)	16
ROTATION	CCW,looking into the end-shield
INSULATION CLASS	B
MOTOR PROTECTION	Thermocontact 135±5℃
TEMPERATURE RISE	75K max
PROTECTION CLASS	IP54
OPERATING TYPE	**S1**
AMBIENT TEMPERATURE	-30°C +60°C
BEARINGS	Ball bearings
MOUNTING TYPE	Horizontal or Vertical
ELECTRICAL CONNECTION	Lead wire Silikon 4G 0.75mm² ,Length 100mm in terminal box connected （40.75mm²100mm）
APPROVALS	CCC、CE
NET WEIGHT/GROSS WEIGHT	15.0/17.0kg
PACKING	67.0*67.0*25cm

LABEL :

REFPOWER Axial Fan Motor
RW4-630 230V PUHALTAVA
230V 50Hz 3.50A 535/750W 1360r/min
16 μ F/450V CL.B XX/XX
CE

FLOW RATE CURVE :

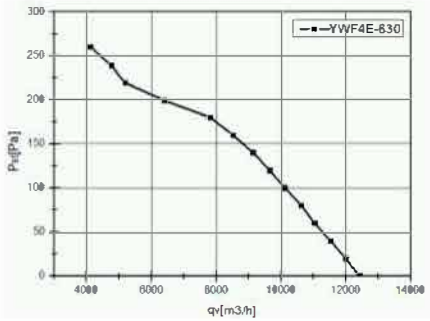

WIRING DIAGRAM :

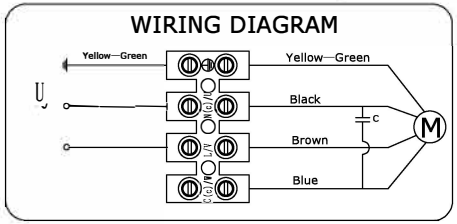

ErP2015 LABEL:

ErP2015（N40）
N=43.07 η statA= 36.7%
RW4-630 230V PUHALTAVA

REV.	DESCRIPTION	APPROVED	DATE				SIGN	DATE
						DRN. BY		
						CHD. BY		
						ENG. BY		
						APP. BY		

TITLE
RW4-630 230V PUHALTAVA

PROJECTION

A4
SCALE
SHEET: of