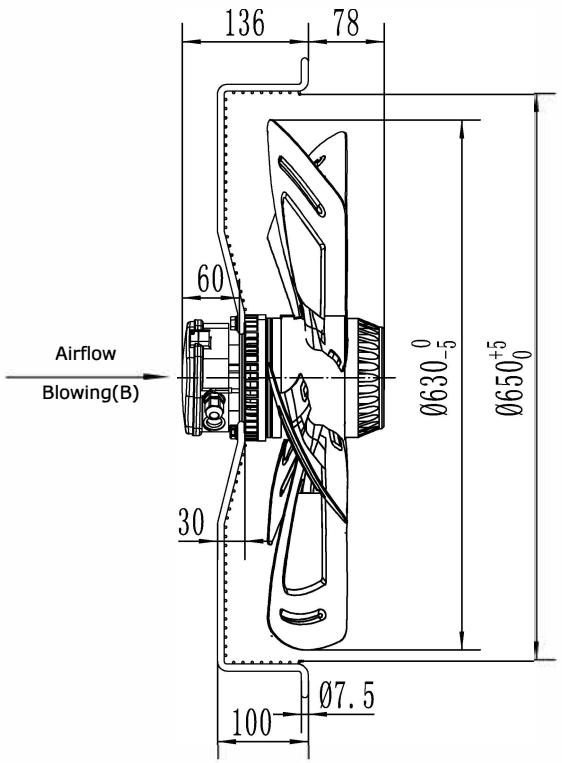

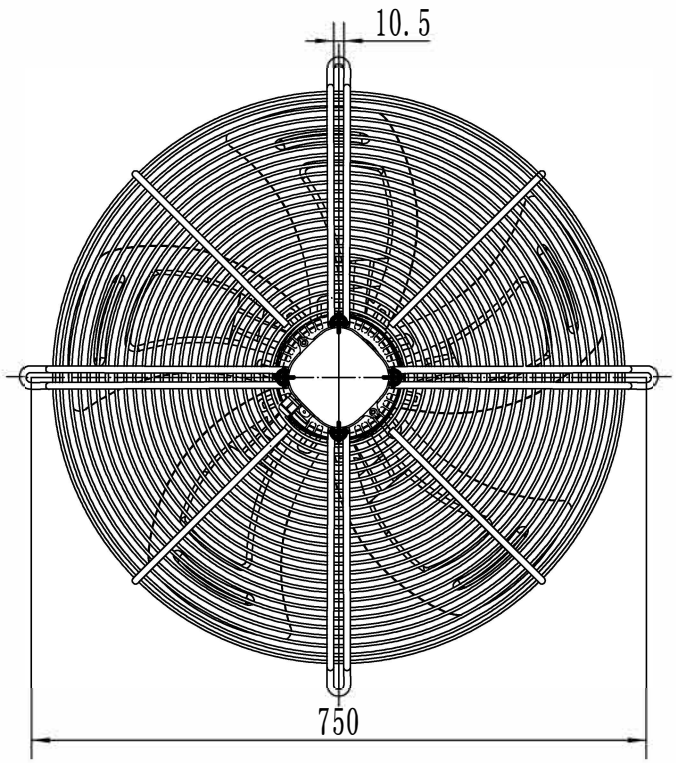

UNIT	Axial fan motor
MOTOR	Three phases motor
MOTOR TYPE	RW4-630 400V PUHALTAVA
VOLTAGE (V)	400
FREQUENCY (Hz)	50
INPUT POWER (W)	800
CURRENT (A)	1.60
SPEED (r/min)	1320
AIR FLOW 20Pa (m³/h)	12000
NOISE (dBA)	75
CAPACITOR (μF/450V)	-
ROTATION	CCW ,looking into the end-shield
INSULATION CLASS	B
MOTOR PROTECTION	Thermocontact 135±5℃
TEMPERATURE RISE	75K max
PROTECTION CLASS	IP54
OPERATING TYPE	S1
AMBIENT TEMPERATURE	-30°C +60°C
BEARINGS	Ball bearings
MOUNTING TYPE	Horizontal or Vertical
ELECTRICAL CONNECTION	Lead wire Silikon 4G 0.75mm²+2G 0.30mm² ,Length 100mm in terminal box connected (40.75mm²+20.30mm²100mm)
APPROVALS	CCC、CE
NET WEIGHT/GROSS WEIGHT	15.0/17.0kg
PACKING	67.0*67.0*25cm

LABEL :

REPPOWER Axial Fan Motor
RW4-630 400V PUHALTAVA
400V 50Hz 1.60A 600/800W 1320r/min
CL.B XX/XX
CE

FLOW RATE CURVE :

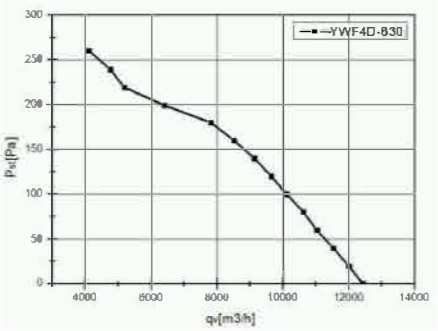

WIRING DIAGRAM :

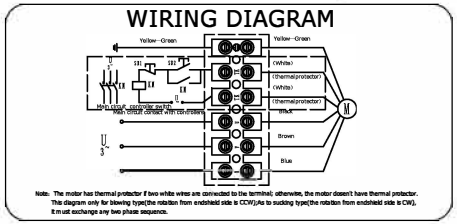

ErP2015 LABEL:

ErP2015（N40）
N=46.48 η statA= 40.1%
RW4-630 400V PUHALTAVA

REV.	DESCRIPTION	APPROVED	DATE				SIGN	DATE
						DRN. BY		
						CHD. BY		
						ENG. BY		
						APP. BY		

TITLE
RW4-630 400V PUHALTAVA

PROJECTION

A4
SCALE
SHEET: of