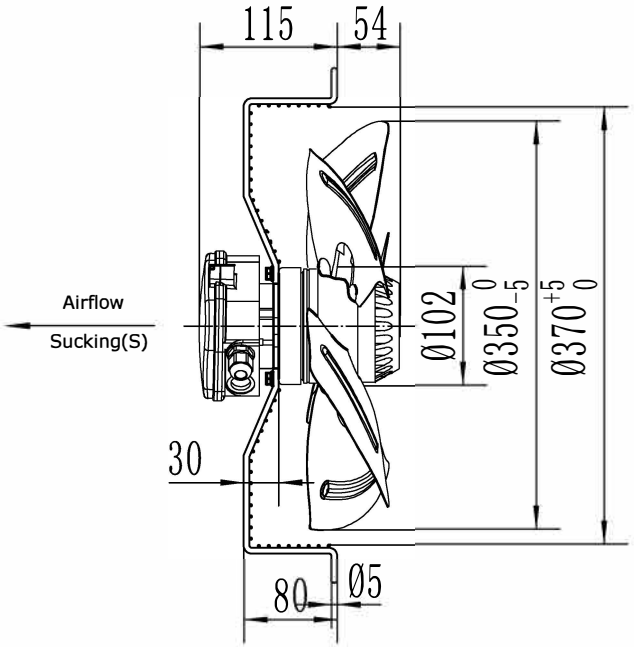

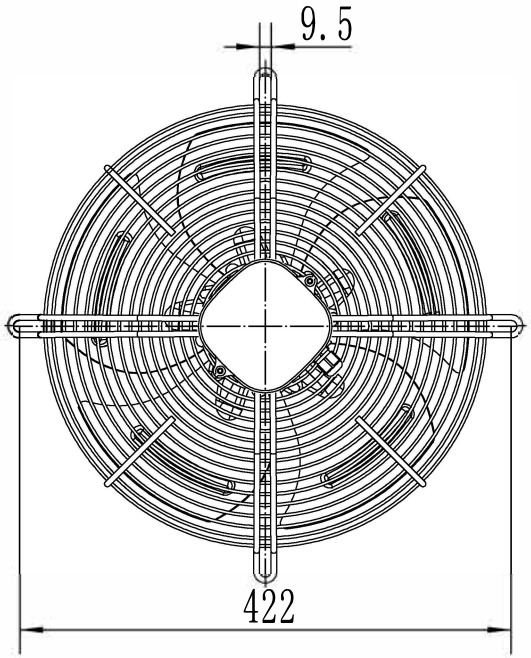

UNIT	Axial fan motor
MOTOR	Three phases motor
MOTOR TYPE	RW6-350 400V IMEVÄ
VOLTAGE (V)	400
FREQUENCY (Hz)	50
INPUT POWER (W)	80
CURRENT (A)	0.32
SPEED (r/min)	920
AIR FLOW (m³/h)	1400
NOISE (dBA)	56
ROTATION	CW ,looking into the end-shield
INSULATION CLASS	B
MOTOR PROTECTION	Thermocontact 135±5℃
TEMPERATURE RISE	75K max
PROTECTION CLASS	IP54
OPERATING TYPE	S1
AMBIENT TEMPERATURE	-30°C +60°C
BEARINGS	Ball bearings
MOUNTING TYPE	Horizontal or Vertical
ELECTRICAL CONNECTION	Lead wire Silikon 4G 0.50mm²+2G 0.30mm², Length 100mm in terminal box connected (40.5mm²+20.3mm² 100mm)
APPROVALS	CCC、CE
NET WEIGHT/GROSS WEIGHT	5.0/6.0kg
PACKING	38.5*38.5*19cm

LABEL :

REFPOWER
Axial Fan Motor
RW6-350 400V IMEVÄ
400V 50Hz 0.32A 18/80W 920r/min
CL.B XX/XX
CE

WIRING DIAGRAM :

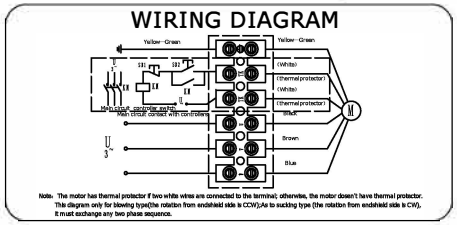

FLOW RATE CURVE :

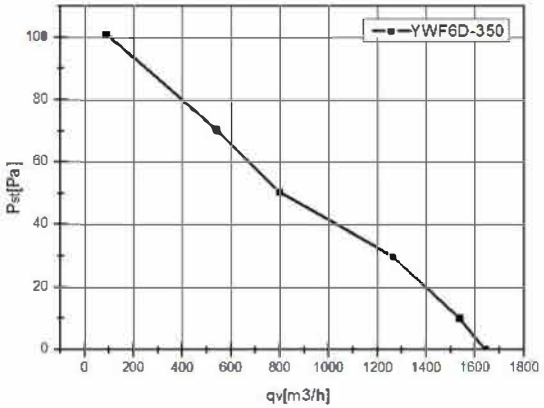

							SIGN	DATE	TITLE
						DRN. BY			RW6-350 400V IMEVÄ
						CHD. BY			PROJECTION
						ENG. BY			A4
REV.	DESCRIPTION	APPROVED	DATE			APP. BY			SCALE / SHEET: of