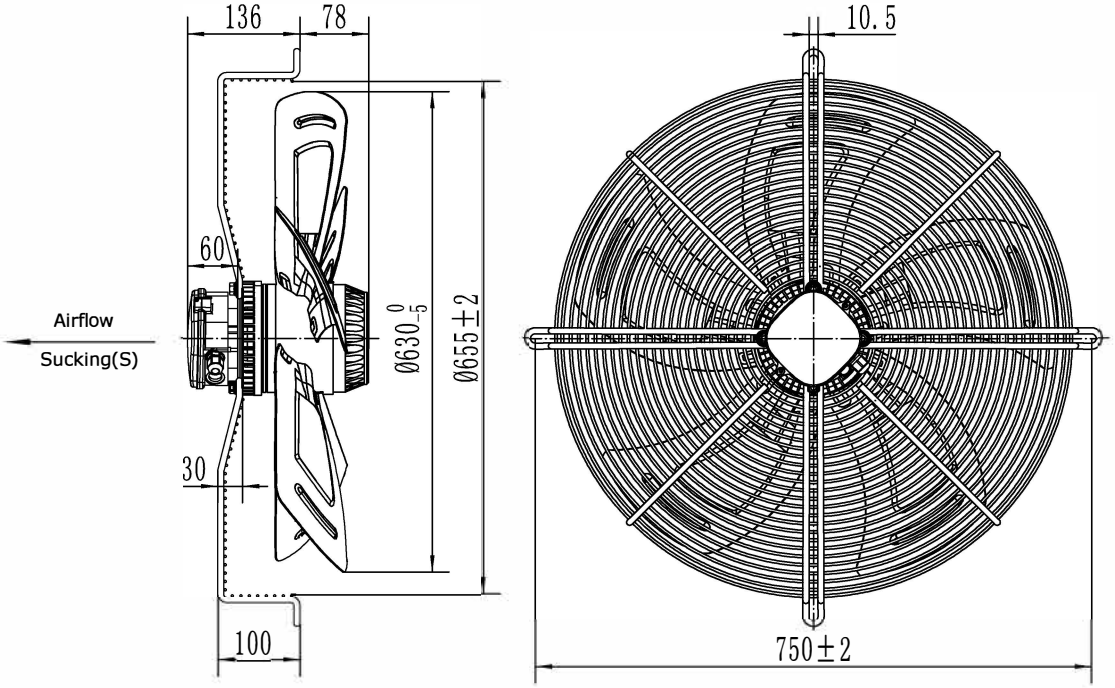

UNIT	Axial fan motor
MOTOR	Three phases motor
MOTOR TYPE	RW6-630 400V IMEVÄ
VOLTAGE (V)	400
FREQUENCY (Hz)	50
INPUT POWER (W)	435
CURRENT (A)	1.35
SPEED (r/min)	930
AIR FLOW 20Pa (m³/h)	9560
NOISE (dBA)	71
CAPACITOR (μF/450V)	-
ROTATION	CW ,looking into the end-shield
INSULATION CLASS	B
MOTOR PROTECTION	Thermocontact 135±5℃
TEMPERATURE RISE	75K max
PROTECTION CLASS	IP54
OPERATING TYPE	S1
AMBIENT TEMPERATURE	-30°C +60°C
BEARINGS	Ball bearings
MOUNTING TYPE	Horizontal or Vertical
ELECTRICAL CONNECTION	Lead wire Silikon 4G 0.75mm²+2G 0.30mm², Length 100mm in terminal box connected
APPROVALS	CE
NET WEIGHT/GROSS WEIGHT	15.0/17.0kg
PACKING	67.0*67.0*25cm

LABEL:

REF POWER
Axial Fan Motor
RW6-630 400V IMEVÄ
400V 50Hz 1.35A 290/435W 930r/min
CL.B XX/XX
CE

WIRING DIAGRAM:

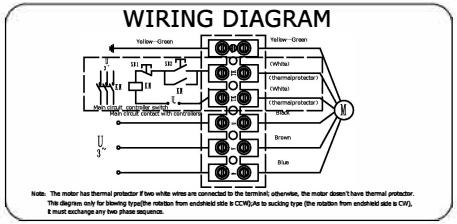

FLOW RATE CURVE:

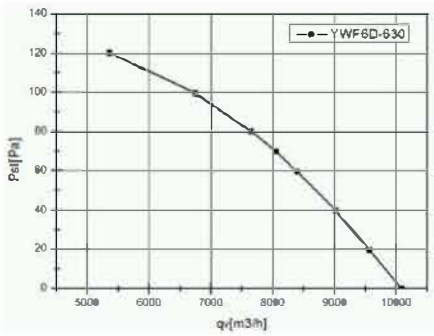

ErP2015 LABEL:

ErP2015 (N40)
N=44.45 η statA= 36.3%
RW6-630 400V IMEVÄ

REV.	DESCRIPTION	APPROVED	DATE				SIGN	DATE
						DRN. BY		
						CHD. BY		
						ENG. BY		
						APP. BY		

TITLE
RW6-630 400V IMEVÄ

PROJECTION

A4
SCALE
SHEET: of