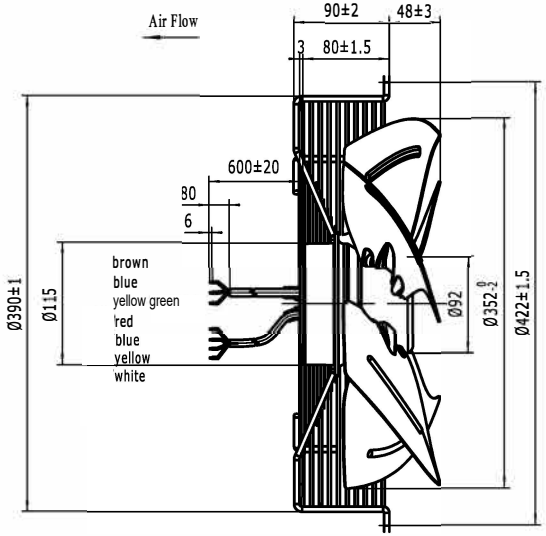

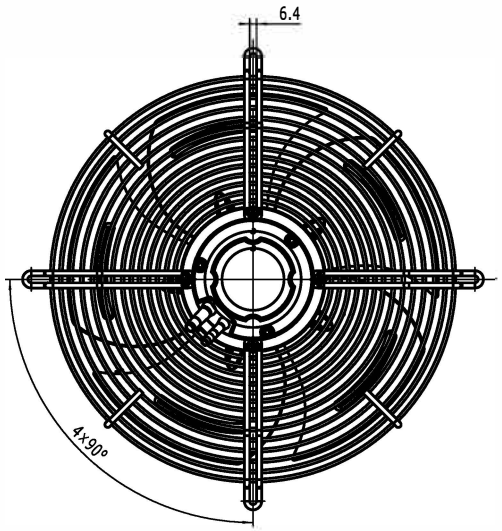

UNIT	Axial fan motor
MOTOR E	Three phases motor
MOTOR TYPE	RWE-350 230V IMEVÄ
VOLTAGE (V)	230
FREQUENCY (Hz)	50/60
INPUT POWER (W)	170
CURRENT (A)	≤1.2
SPEED (r/min)	1500
AIR FLOW (m³/h)	3550
NOISE (dBA)	67
ROTATION	CCW ,seen on rotor of motor
INSULATION CLASS	F
MOTOR PROTECTION	Undervoltage protection Overvoltage protection Overcurrent protection Locked rotor protection Automatic restart capability Soft start
PROTECTION CLASS	IP44
OPERATING TYPE	S1
AMBIENT TEMPERATURE	-25°C +60°C
BEARINGS	Ball bearings
MOUNTING TYPE	Horizontal or Vertical
NET WEIGHT/GROSS WEIGHT	4.4/4.8kg
PACKING	38.5*38.5*19cm

LABEL :

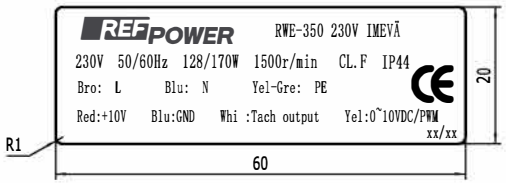

FLOW RATE CURVE :

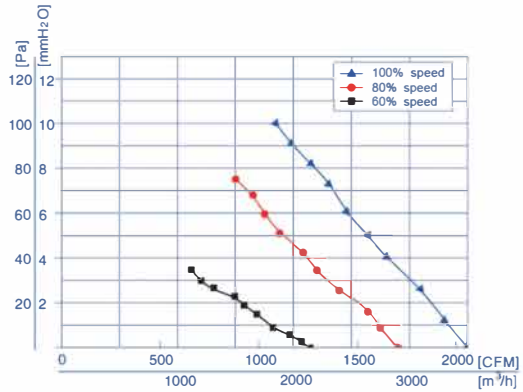

							SIGN	DATE
						DRN.BY		
						CHD.BY		
						ENG.BY		
REV.	DESCRIPTION	APPROVED	DATE			APP.BY		

TITLE
RWE-350 230V IMEVÄ

PROJECTION

A4
SCALE
SHEET: of