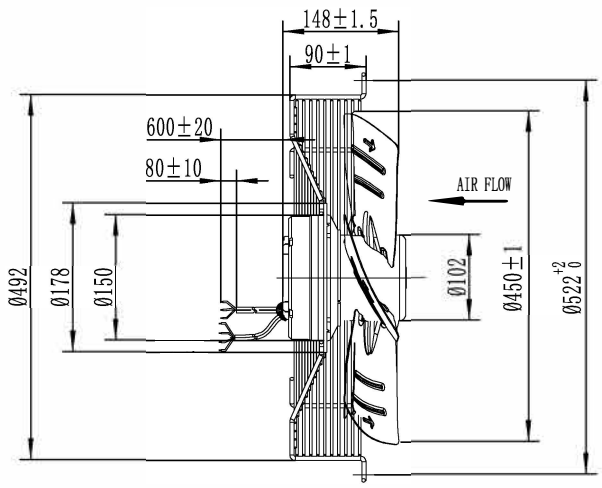

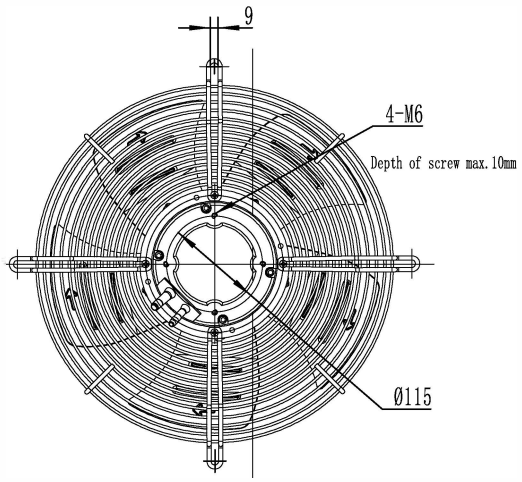

UNIT	Axial fan motor
MOTOR	Three phases motor
MOTOR TYPE	RWE-450 230V IMEVÄ
VOLTAGE (V)	230
FREQUENCY (Hz)	50/60
INPUT POWER (W)	330
CURRENT (A)	≤2.3
SPEED (r/min)	1300
AIR FLOW (m³/h)	6000
NOISE (dBA)	64
ROTATION	CCW , seen on rotor of motor
INSULATION CLASS	F
MOTOR PROTECTION	Undervoltage protection Overvoltage protection Overcurrent protection Locked rotor protection Automatic restart capability Soft start
PROTECTION CLASS	IP44
OPERATING TYPE	S1
AMBIENT TEMPERATURE	-25° C +70° C
BEARINGS	Ball bearings
MOUNTING TYPE	Horizontal or Vertical
NET WEIGHT/GROSS WEIGHT	7.2/8.5kg
PACKING	49*49*23cm

LABEL :

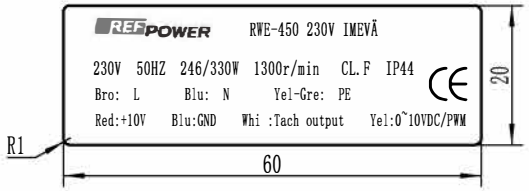

FLOW RATE CURVE :

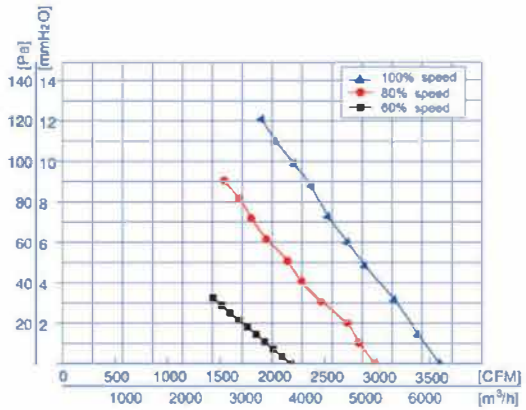

WIRING DIAGRIM :

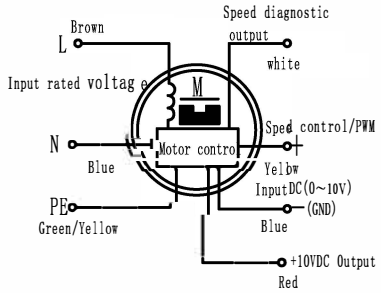

							SIGN	DATE	TITLE RWE-450 230V IMEVÄ
						DRN. BY			
						CHD. BY			PROJECTION
						ENG. BY			A3
REV.	DESCRIPTION	APPROVED	DATE			APP. BY			SCALE SHEET: of